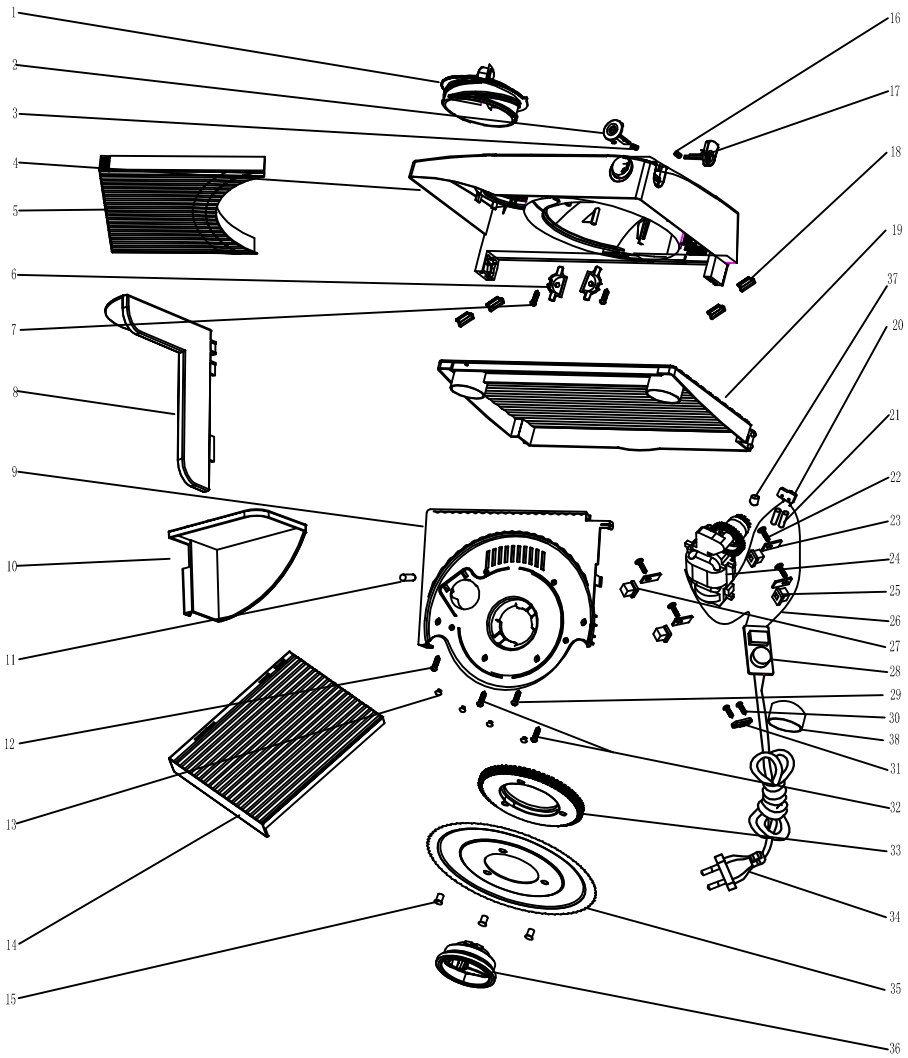

序号	图号	名称	材料或规格	用量	备注
38		Magnetic beads	Ferrite	1	
37		Gear cap			
36		Blade latch	ABS	1	
35	892.K.03	Circularity Blade	SUS420J2	1	
34		Power cord	2.5A H03VV02-F 2*0.75mm²	1	
33		Gear	POM	1	
32		Screw	PA3.0x10	2	
31		Cord Grip B	PA66	1	
30		Screw	PA3x12	2	
29		Screw	PC3*14	1	
28		PCB	YJ201	1	
27	892.J.02	Rubber shoulder pads 2	PVC	2	
26		wire	1015/105℃ 600V 24AWG	1	
25	892.J.01	Rubber shoulder pads 1	PVC	2	
24		Motor	5525QB	1	
23	892.K.04	Impaction	Zinc plating plate	4	
22		Screw	PWA3*12	4	
21		Contract board	φ3*10	2	
20		Jogging switch	WS-3	1	
19		Soleplate B	ABS	1	
18	896-2-03	Anti-slip pads	Rubber	2	
17		Safety rack	ABS	1	
16	896-2-01	Spring	65Mn	1	
15	892.K.02	Rivet	Al	3	
14		Soleplate A	ABS	1	
13		Protect the Gum A	POM	4	
12		Screw	PA3x14	1	
11	892.F.01	Short Shaft	SUS430	1	
10		Food pusher	ABS	1	
9		Stand	ABS	1	
8		Food tray	ABS	1	
7		Screw	PA3*10	2	
6		Wrap frame	ABS	2	
5		Thickness guide	ABS	1	
4		Main body	ABS	1	
3	896-2-02	Spring	65Mn	1	
2		Jogging Switch botton	ABS	1	
1		Knob	ABS	1	

标记 Marking	数量 Number	更改单号 Change No.	签名 Signature	日期 Date

设计 Designed By	150W	版本 Edition	比例 Scale
校对 Verified By		A	
工艺 Process		第 1 张 No.	共 1 张 Total
审核 Checked By			
标准化Standardization	投影方式		
批准 Approved By	First Angle Projection		